PRODUCT SHEET

Description:
Drawer Slide ME4500, 600mm Bayonet Fix, D=456mm, BZP

Item number:
16.13.303-0

Units	Box	Carton	HS Code	Barcode
Pair		12	8302420090	5704866063692

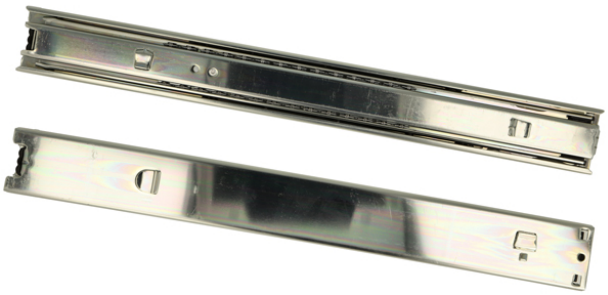

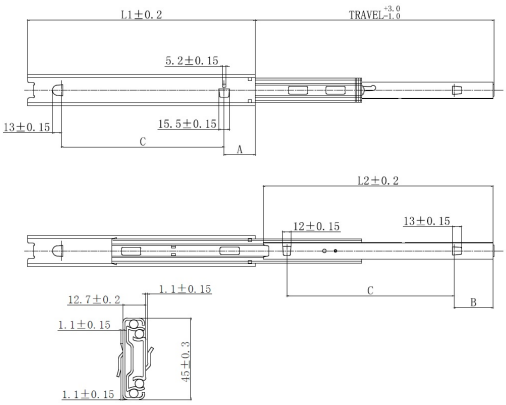

L1	L2	TRAVEL	A	B	C
300	296	300	45	58	206
350	346	350	45	58	256
400	396	400	45	58	256
450	446	450	45	58	306
500	496	500	45	58	356
550	546	550	45	58	406
600	596	600	45	58	456
650	646	650	45	58	506
700	696	700	45	58	556

SISO A/S
Mileparken 11
DK-2740 Skovlunde
Denmark
VAT: 24786013

Phone +45 45 830 900

www.siso.dk
siso@siso.dk

Danske Bank
Nytorv Branch
Copenhagen
SWIFT: DABADKKK

Account no.
4180 3112 112936
IBAN Account
DK7230003112112936